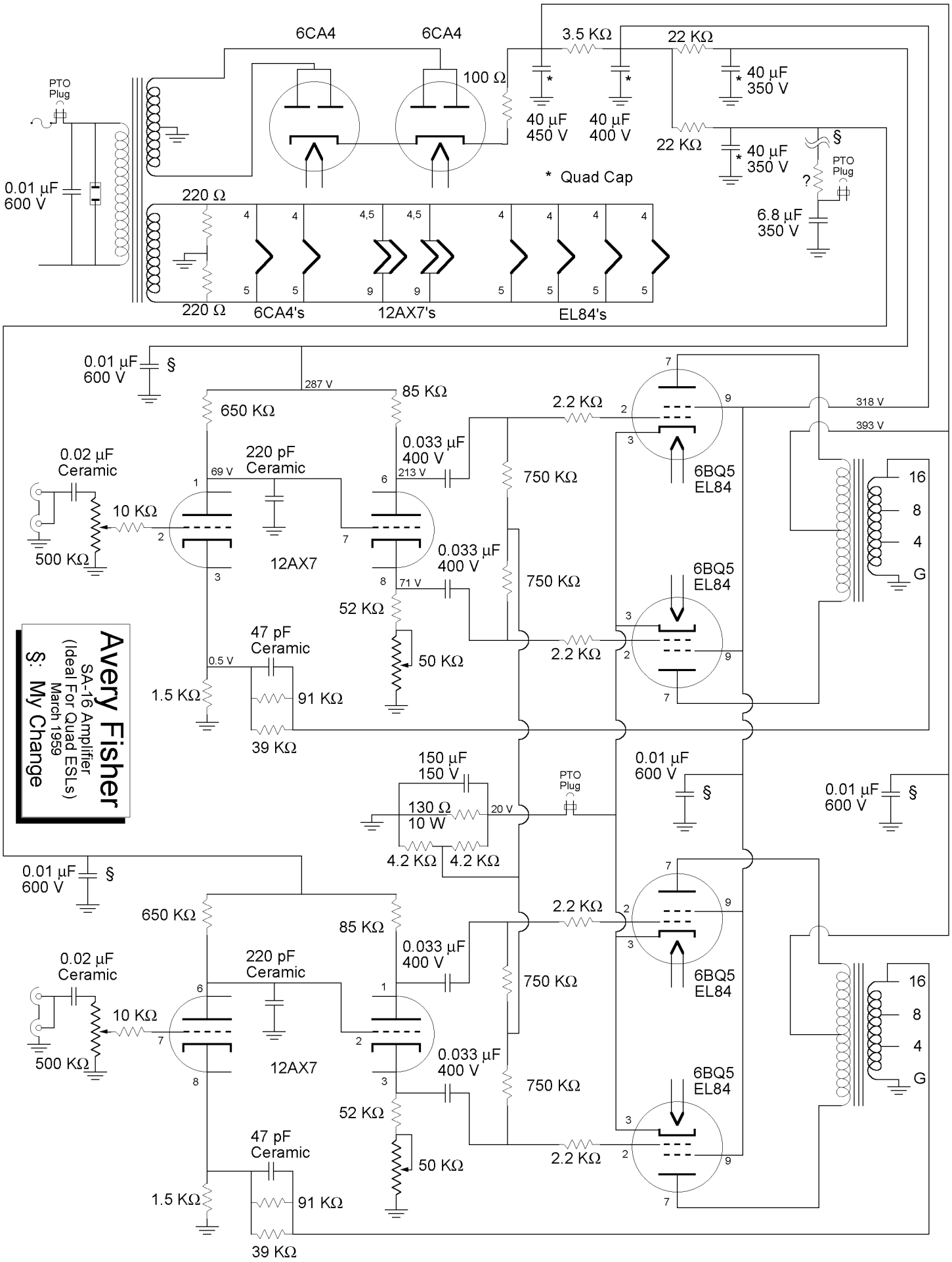
Avery Fisher
SA-16 Amplifier
(Ideal For Quad ESLs)
March 1959
§: My Change
6CA4
6CA4
PTO Plug
0.01 µF 600 V
100 Ω
3.5 KΩ
22 KΩ
40 µF 450 V
40 µF 400 V
40 µF 350 V
22 KΩ
40 µF 350 V
* Quad Cap
§
PTO Plug
?
6.8 µF 350 V
220 Ω
220 Ω
6CA4's
12AX7's
EL84's
0.01 µF 600 V
§
287 V
650 KΩ
85 KΩ
2.2 KΩ
318 V
393 V
0.02 µF Ceramic
220 pF Ceramic
0.033 µF 400 V
750 KΩ
69 V
213 V
10 KΩ
500 KΩ
12AX7
6BQ5 EL84
16
8
4
G
0.033 µF 400 V
750 KΩ
71 V
52 KΩ
47 pF Ceramic
50 KΩ
2.2 KΩ
0.5 V
1.5 KΩ
91 KΩ
39 KΩ
150 µF 150 V
PTO Plug
0.01 µF 600 V
§
0.01 µF 600 V
§
130 Ω 10 W
20 V
4.2 KΩ
4.2 KΩ
0.01 µF 600 V
§
650 KΩ
85 KΩ
2.2 KΩ
0.02 µF Ceramic
220 pF Ceramic
0.033 µF 400 V
750 KΩ
10 KΩ
500 KΩ
12AX7
6BQ5 EL84
16
8
4
G
0.033 µF 400 V
750 KΩ
52 KΩ
47 pF Ceramic
50 KΩ
2.2 KΩ
1.5 KΩ
91 KΩ
39 KΩ

AUX AC
120 V AC 150 W MAX